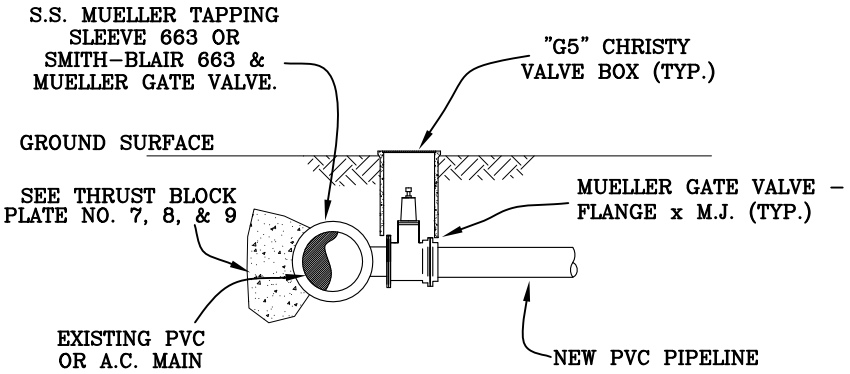

ELEVATION VIEW

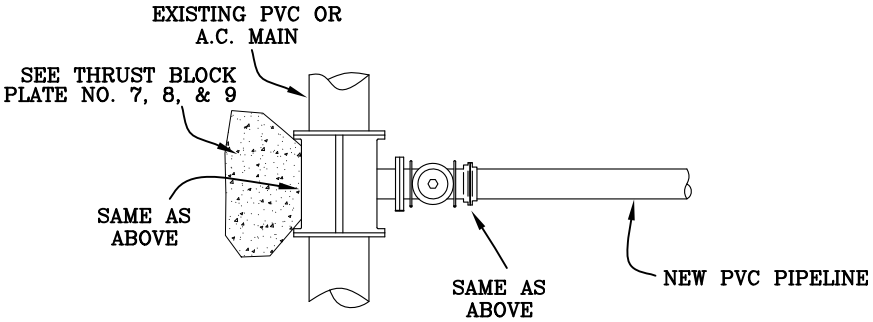

PLAN VIEW

ALLOWABLE "HOT TAP" CONNECTION COMBINATIONS

MAIN BEING TAPPED	SIZE OF OUTLET PIPE
24"	16" OR SMALLER
18"	12" OR SMALLER
16"	10" OR SMALLER
14"	8" OR SMALLER
12"	8" OR SMALLER
10"	6" OR SMALLER
8"	4" OR SMALLER

NOTES:

1) WHEN TAPPING SLEEVES ARE ORDERED FROM THE MANUFACTURER, THE OUTSIDE DIAMETER OF THE PIPE BEING TAPPED, THE SIZE OF THE OUTLET DESIRED, AND THE WORKING PRESSURE SHALL BE SPECIFIED TO INSURE THAT THE CORRECT SLEEVES ARE FURNISHED. LEAD-JOINT SLEEVES SHALL NOT BE USED AND THE TAPPING SLEEVE SHALL PROVIDE FULL SUPPORT AROUND THE CIRCUMFERENCE OF THE PIPE.

2) THE TAPPING SLEEVES SHALL BE ASSEMBLED ON THE PIPE IN ACCORDANCE WITH THE MANUFACTURER'S DIRECTIONS, INSURING THAT NO PIPE DISTORTION OCCURS. THE TAPPING VALVE IS THEN CONNECTED TO THE SLEEVE.

3) TAPPING SLEEVES SHALL BE SUPPORTED INDEPENDENTLY FROM THE PIPE DURING THE TAPPING. SUPPORT USED SHALL BE LEFT IN PLACE AFTER TAPPING. THRUST BLOCKS SHALL BE USED AS WITH ANY OTHER FITTING OR APPURTENANCE.

4) ALL THRUST BLOCKS TO BE POURED AGAINST UNDISTURBED SOIL, PRIOR TO POURING. OMWC WILL TEST SOIL FOR COMPACTION.

5) POLYETHYLENE PLASTIC FILM WRAP SHALL BE PLACED AROUND ALL BURIED DUCTILE IRON VALVES AND FITTINGS. FILM WRAP SHALL BE OF VIRGIN POLYETHYLENE AND MEET THE REQUIREMENTS OF ASTM D-1248 FOR TYPE I, CLASS A, GRADE E-1, AND ASTM D-1238. FILM WRAP SHALL BE 10 MILS IN THICKNESS.

6) ALL THRUST BLOCKS SHALL BE ALLOWED TO SET UP, UNDISTURBED, AND SHALL BE APPROVED BY OMWC PRIOR TO BACKFILL.

7) CONCRETE STRENGTH SHALL BE 2,000 PSI AT 28 DAYS MINIMUM AND SHALL NOT COME INTO DIRECT CONTACT WITH PIPE AND FITTINGS OR GATE VALVES.

8) SEE PLATES NO. 8 AND NO. 9 FOR THRUST BLOCK SIZING TABLES.

REV. DATE: 1/19/16

OILDALE MUTUAL WATER CO.

POTABLE/DOMESTIC HOT TAPPING WATER MAIN

DATE: 8/1/13 | PLATE No. 17